Meaker VI's Mark-8

A beginner's guide to making a homemade NERF blaster

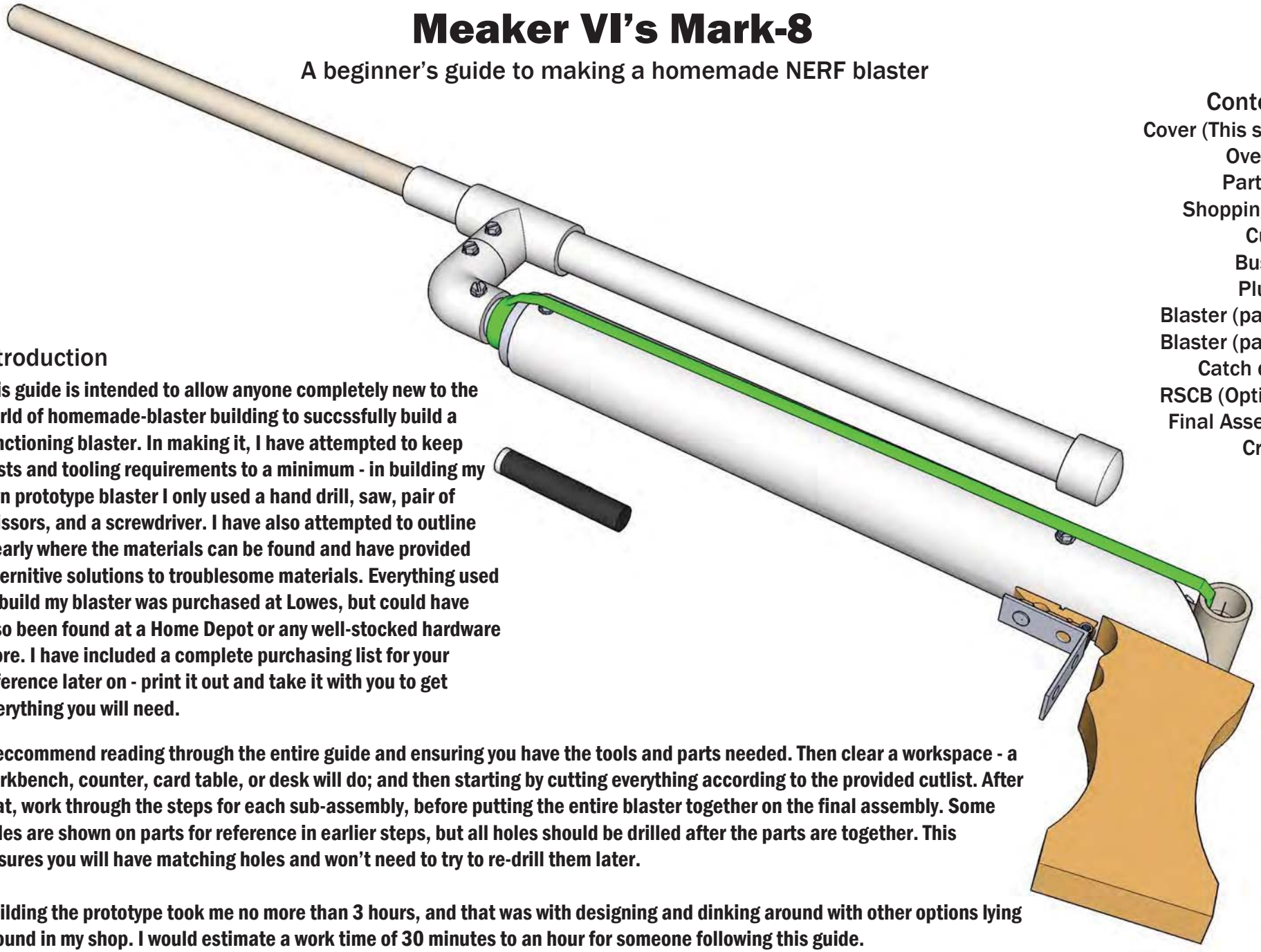

Contents:

Introduction

This guide is intended to allow anyone completely new to the world of homemade-blaster building to succssfully build a functioning blaster. In making it, I have attempted to keep costs and tooling requirements to a minimum - in building my own prototype blaster I only used a hand drill, saw, pair of scissors, and a screwdriver. I have also attempted to outline clearly where the materials can be found and have provided alternitive solutions to troublesome materials. Everything used to build my blaster was purchased at Lowes, but could have also been found at a Home Depot or any well-stocked hardware store. I have included a complete purchasing list for your reference later on - print it out and take it with you to get everything you will need.

I reccommend reading through the entire guide and ensuring you have the tools and parts needed. Then clear a workspace - a workbench, counter, card table, or desk will do; and then starting by cutting everything according to the provided cutlist. After that, work through the steps for each sub-assembly, before putting the entire blaster together on the final assembly. Some holes are shown on parts for reference in earlier steps, but all holes should be drilled after the parts are together. This ensures you will have matching holes and won't need to try to re-drill them later.

Building the prototype took me no more than 3 hours, and that was with designing and dinking around with other options lying around in my shop. I would estimate a work time of 30 minutes to an hour for someone following this guide.

Mark-8 Overview

Meaker VI - Nerfhaven Homemade Contest - 2013

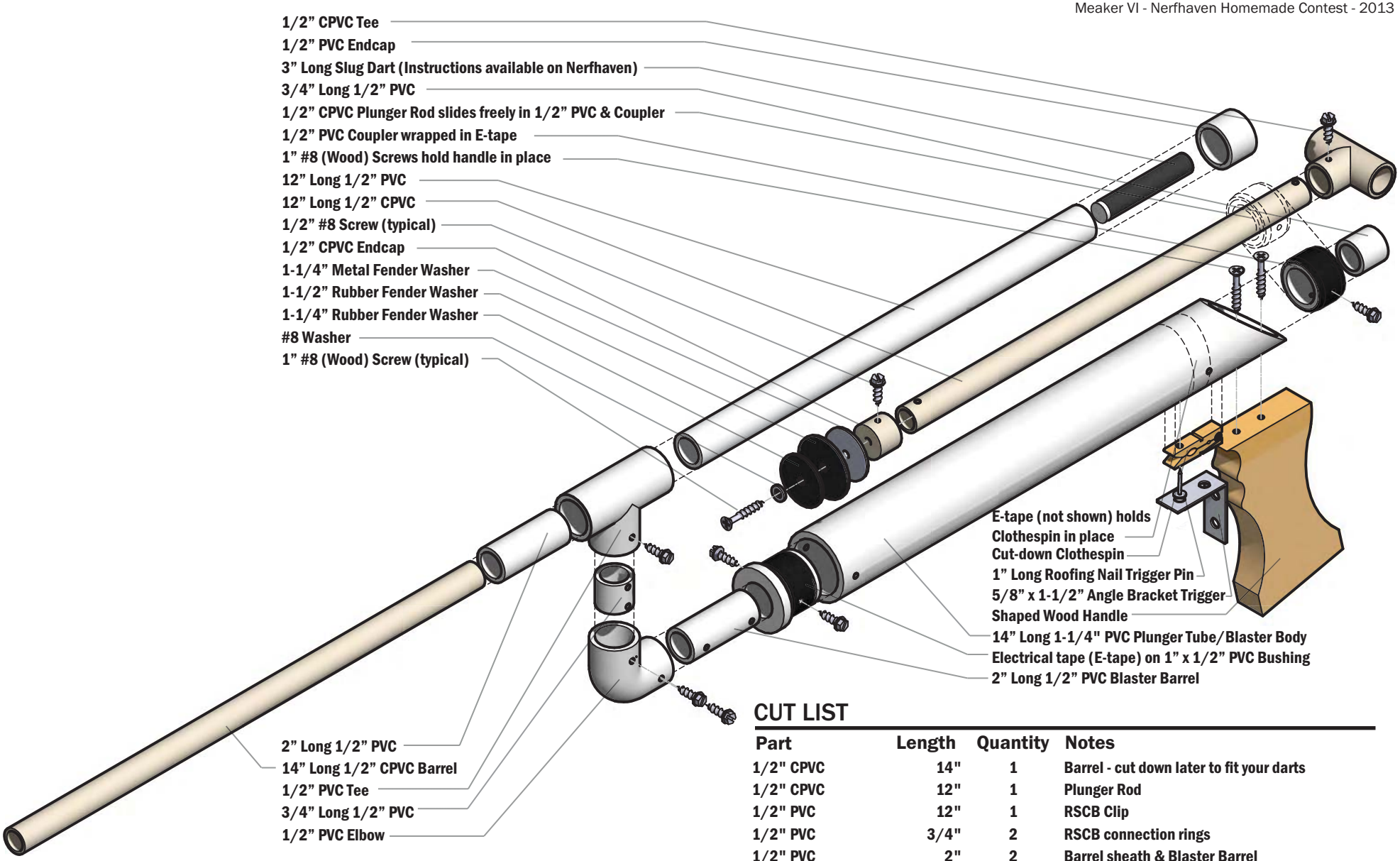

Latex tubing (or Bungie) not shown for clarity

CUT LIST

Part	Length	Quantity	Notes
1/2" CPVC	14"	1	Barrel - cut down later to fit your darts
1/2" CPVC	12"	1	Plunger Rod
1/2" PVC	12"	1	RSCB Clip
1/2" PVC	3/4"	2	RSCB connection rings
1/2" PVC	2"	2	Barrel sheath & Blaster Barrel
1 1/4" PVC	14"	1	Plunger Tube/Blaster Body - one end at an angle
1/2" PVC Coupler	-	-	Cut in Half
Handle	5"	1	Shape and slant per your preferance
Clothespin	-	-	Cut tails off

Mark-8 Parts List

Meaker VI - Nerfhaven Homemade Contest - 2013

Plunger

12” long 1/2“ CPVC
#8 Washer
1-1/4” Rubber Washer
1-1/2” Rubber Washer
1-1/4” Fender Washer
1/2” CPVC Endcap
1 x 1/2” #8 Screw
1 x 1” #8 Screw
Not shown (used later)
1 x 1/2” CPVC ‘T’
1 x 1/2” #8 Screw

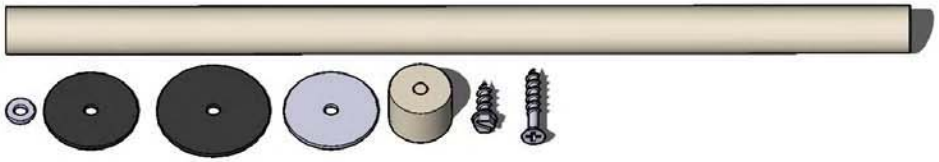

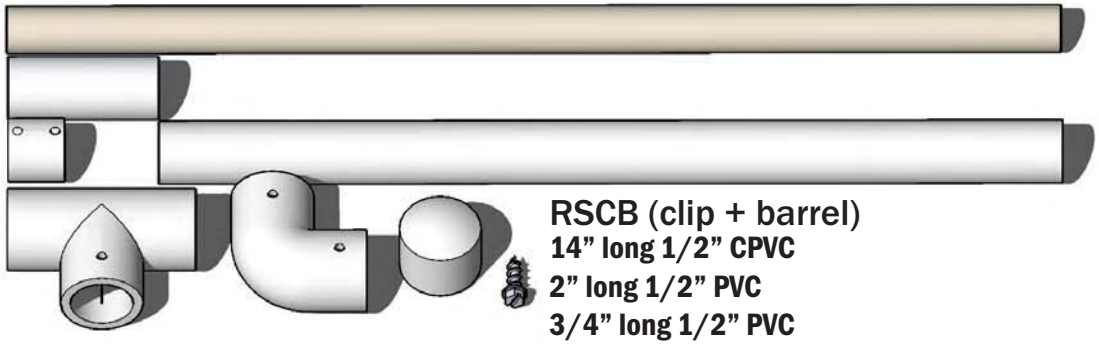

RSCB (clip + barrel)

14” long 1/2” CPVC
2” long 1/2” PVC
3/4” long 1/2” PVC
12” long 1/2” PVC
1/2” PVC ‘T’
1/2” PVC Elbow
1/2” PVC Endcap
3 x 1/2” #8 Screw

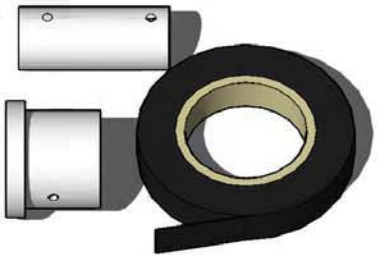

Front Bushing

2” long 1/2” PVC
1“ x 1/2” PVC Bushing
Tape (Electrical, duct, or packing)

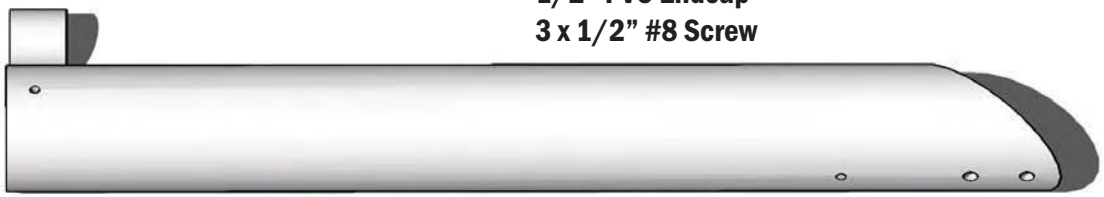

Blaster Body

1/2 of 1/2” PVC Coupler
14” Long (sloped) 1-1/4” PVC Handle
Tape (Electrical, duct, or packing)
3/4” long 1/2” PVC

1 x 1/2” #8 Screw
2 x 1” #8 Screw
1 x 1-1/4” Nail
Clothespin (cut tails off)
1-1/2” x 1-1/2” Angle bracket

Not Shown (used later)
2 x 1/2” #8 Screw
24-36” of Latex tubing or Bungie

Mark-8 Shopping List

Meaker VI - Nerfhaven Homemade Contest - 2013

✔	Part	Quantity	Cost	Notes
☐	1/2” CPVC Pipe	27”	$5.00	Bring a dart to test fit - should slide in/out easily, but stay in place when releaseed
☐	1/2” PVC Pipe	19”	$2.00	Schedule 40 or 200 psi
☐	1-1/4” PVC Pipe	14”	$4.50	Schedule 40
☐	1/2” PVC Endcap	1	$0.50	All 1/2” PVC fittings are for RSCB clip - omit if you don’t want/need to build one
☐	1/2” PVC ‘T’	1	$0.50	
☐	1/2” PVC Coupler	1	$0.50	
☐	1/2” PVC Elbow	1	$0.50	
☐	1” x 1/2” PVC Bushing	1	$0.50	If you cannot find this, grab a stick of Schedule 40 1” PVC pipe (est. $4)
☐	1/2” CPVC Endcap	1	$0.50	
☐	1/2” CPVC ‘T’	1	$0.50	
☐	1-1/4” Rubber Washer	1	$1.00	Neoprene is ok too, they usually come in the hardware bins in 2-packs
☐	1-1/2” Rubber Washer	1	$1.00	Neoprene is ok too, they usually come in the hardware bins in 2-packs
☐	1-1/4” Fender Washer	1	$1.25	Mine come in 4-packs in the same bins as the rubber washers
☐	#8 Washers	1	$1.50	Usually come in multi-packs (100+).
☐	#8 Screws - 1/2” Long	8	$6.00	Usually come in multi-packs (100+). Use whichever drive type you prefer
☐	#8 Screws - 1-1/4” Long	3	$6.00	Usually come in multi-packs (100+). Can also be found in 1lb. boxes as “drywall” or “wood” screws
☐	1-1/4” Roofing Nails	1	$4.00	Usually come in 1lb. boxes
☐	1-1/2” Corner Bracket	1	$3.00	Not to be confused with the flat corner plate. Usually near the other hardware in a seperate area
☐	Clothespin (cut tail off)	1	$2.50	May not be at your local hardware store, but definitely available through Walmart, Target, some Dollar stores, etc.
☐	Latex Tubing	24-36”	$6.00	Pretty sure I used 3/8 “ diameter. Bungie should also work. Extension springs could work if you used a bolt
☐	Wood/Handle Material	5”	$2.25	I used 3x furring strip. Trex, hardwood, stuff in the scrap bin - just about anything should work

Grand Total: $50.00 + Tax

If you have any of these already, go ahead and sub them in to lower your cost. PVC/CPVC is usually sold in 10’ lengths; you only need what I’ve listed, but you need to pay for the whole thing. Handles are completely subjective - use what you like/have on hand. For this first blaster, just cut it square - you can always cut it to shape later. Use whatever driver you like for your screws, I use hex-head because they can be driven with a flat-head (or anything flat) or a hex-socket
Buying one extra of each pipe fitting and an extra length of tubing/bungie will allow you to build 2 blasters for approximately $8 more, bringing the cost per blaster to $29. Each blaster would be approximately $15.50, if you could buy only exactly what you need for each blaster (you can’t). Subbing in materials and methods you are familiar with is highly encouraged. This list should be entirely available at Lowes or Homedepot, excepting maybe the clothespin which you can find at just about any home or grocery store - wood or plastic are fine.

Just check to see that you have the following tools:
A Drill, 1/8” drill bit, drivers for your screws, scissors or something else to ream PVC out with, a saw, lubricant, and tape.
Notes: A drill can be a drill press, corded drill, battery drill, pin vice, dremel w/drill bits, brace & bit, whatever you know how to use. A corded Skill can be had for $30 at most major stores. Scissors can be replaced with a pocket knife, utility knife, drill-rasps, files/rasps, sandpaper, etc. Just about anything can cut PVC (even a piece of mason’s twine!), the trouble is cutting the wood/handle material. I reccommend buying a coping saw ($10) if you’ve got nothing else - it can cut just like a scroll saw. I’m no lubricant expert, but stuff available in the electrical aisle should be safe. Anything safe for plastic/rubber should be good; it’s usually white lithium or silicone. Electrical tape, duct tape, or clear packing tape will work. You could also use glue if you wanted for some parts.

Mark-8 Cutlist

Meaker VI - Nerfhaven Homemade Contest - 2013

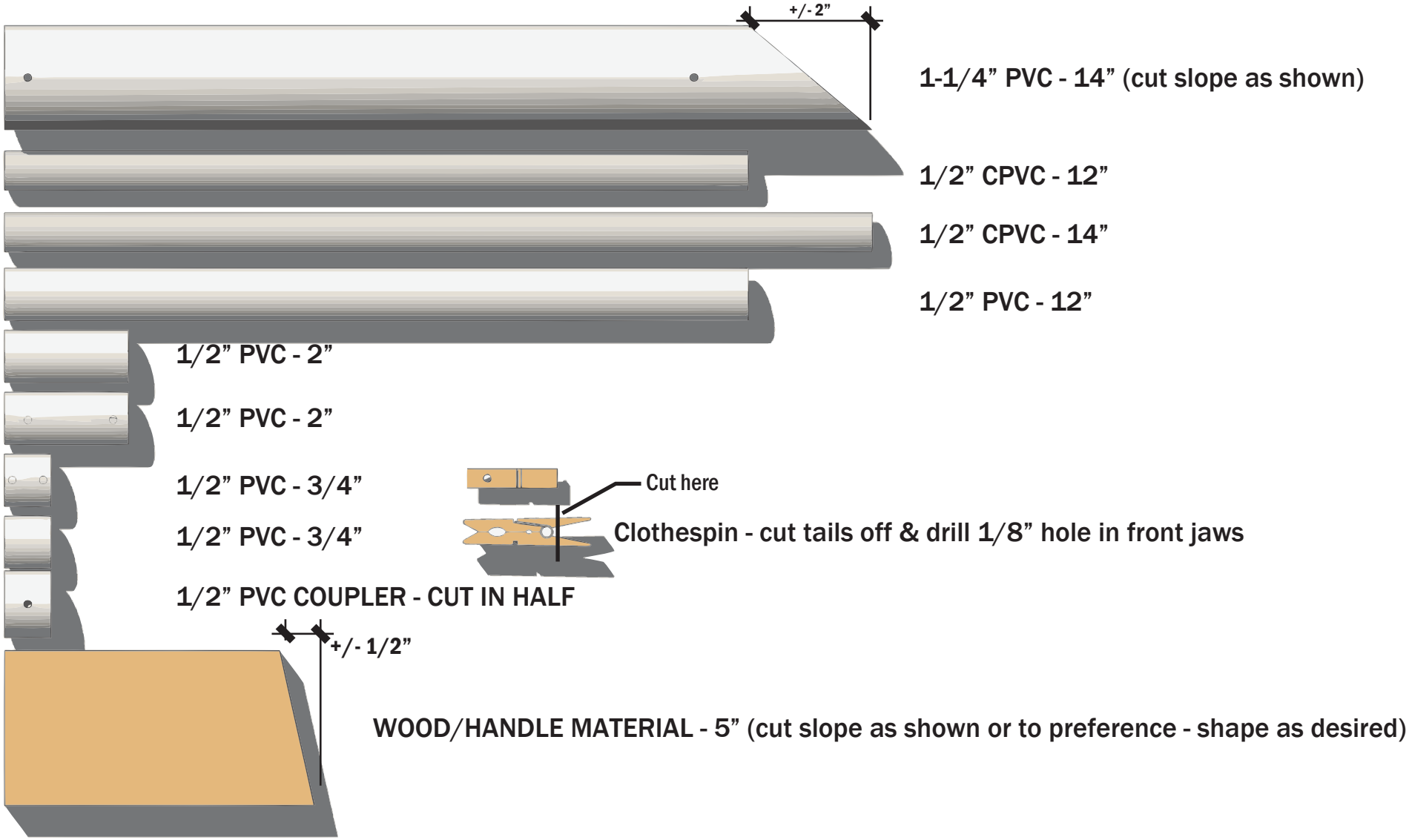

Step 1 **Insert the 2” long 1/2” PVC firmly into the 1” x 1/2” PVC Bushing. Hammer it on something a few times to make sure it’s in tighly. Apply glue if you have it, it isn’t a big deal if you don’t.**

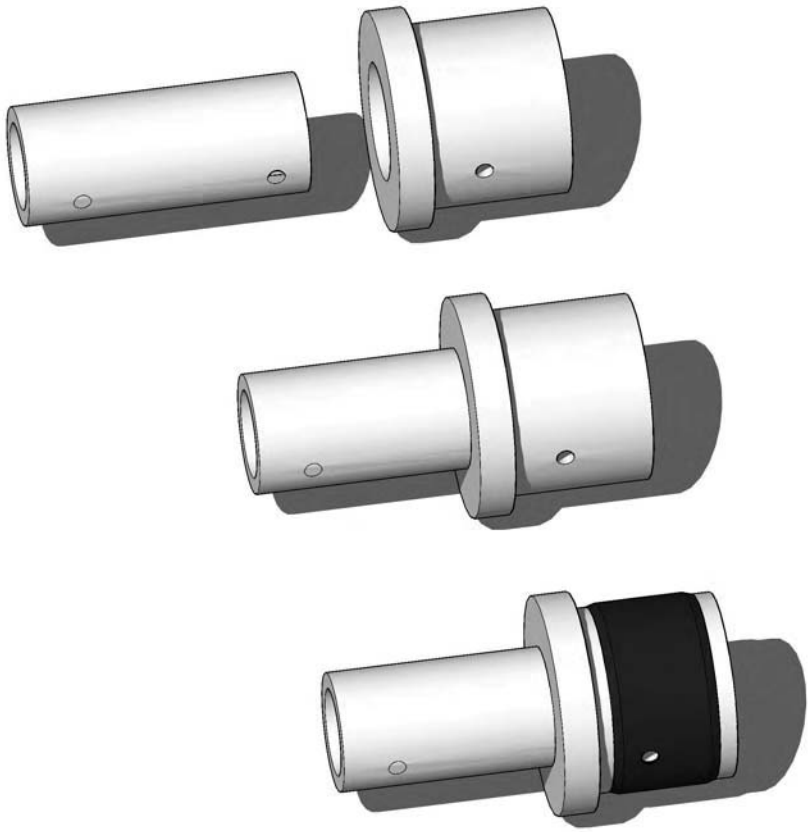

Step 2 **Wrap the assembly in tape until it fits snugly in the 1-1/4” PVC Plunger Tube. It should be possible to remove, but stay in on its own and be somewhat difficult to insert/remove.**

Set aside for later.

Mark-8 Plunger

Meaker VI - Nerfhaven Homemade Contest - 2013

Drill a hole roughly in the center of the 1/2” CPVC endcap, then assemble the plunger head as shown with:

1” #8 Screw
1-1/4” Rubber washer
1-1/2” Rubber washer
1-1/4” Fender washer
1/2” CPVC endcap

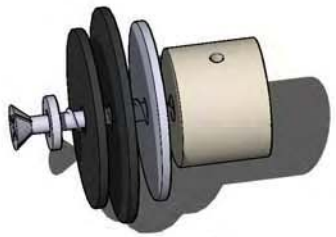

Step 1

Step 2

Attach the plunger head to the 12” long piece of 1/2” CPVC, then drill a hole and drive a 1/2” #8 screw in to keep it in place. The screw won’t drive all the way down, that is ok.

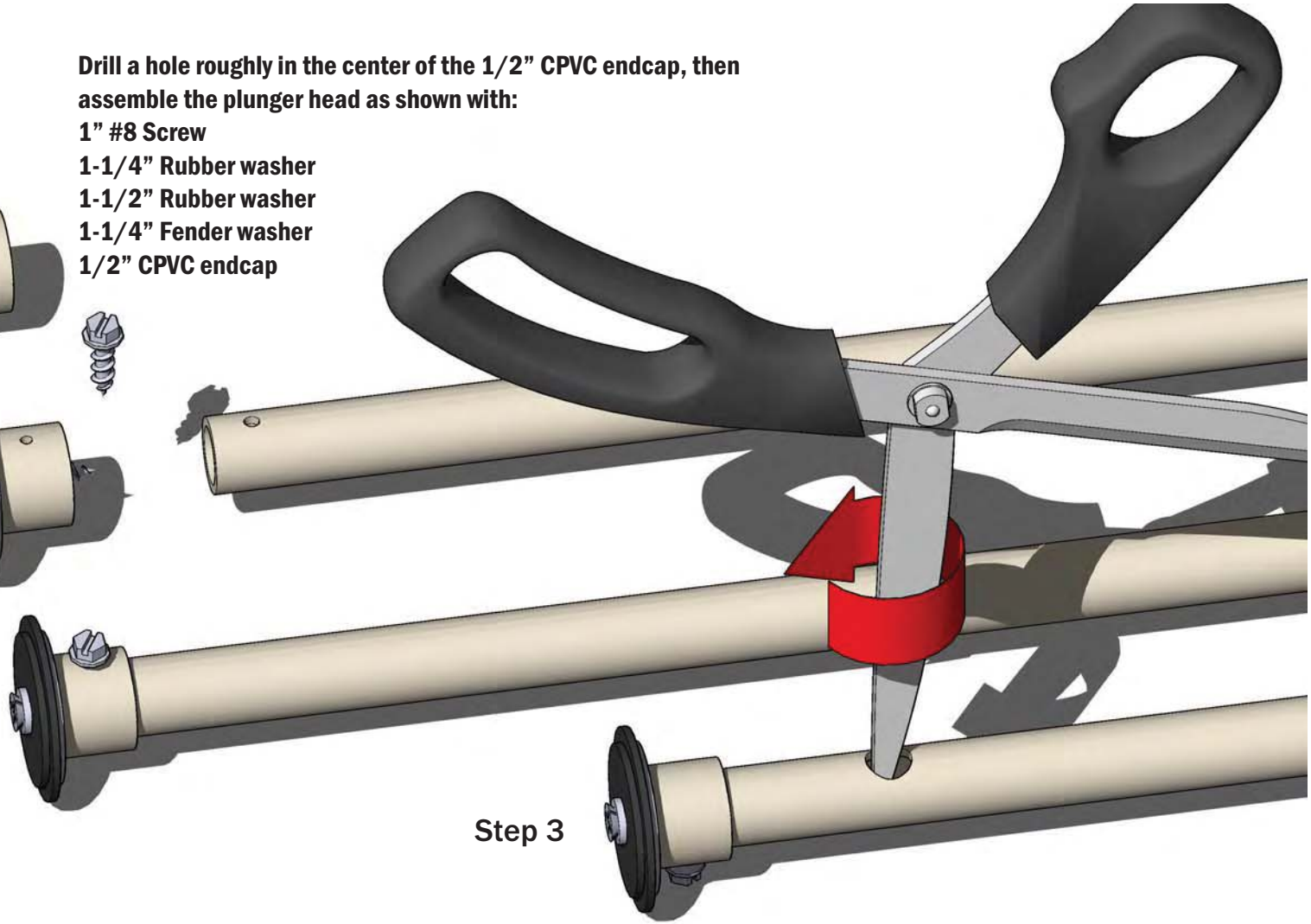

Step 3

Flip the plunger over and drill a hole roughly 2” back from the end of the 12” long 1/2” CPVC, ream it out with the scissors.

Warning! Do not drill all the way through the plunger! Just drill through one wall of the CPVC.

Mark-8 Blaster Body

Meaker VI - Nerfhaven Homemade Contest - 2013

(Shape the handle as desired)
Drill holes in the bottom of the 1-1/4” PVC Plunger tube as shown
Line up the holes in the PVC Plunger tube with the handle, transfer them with a mark, and pre-drill the handle.

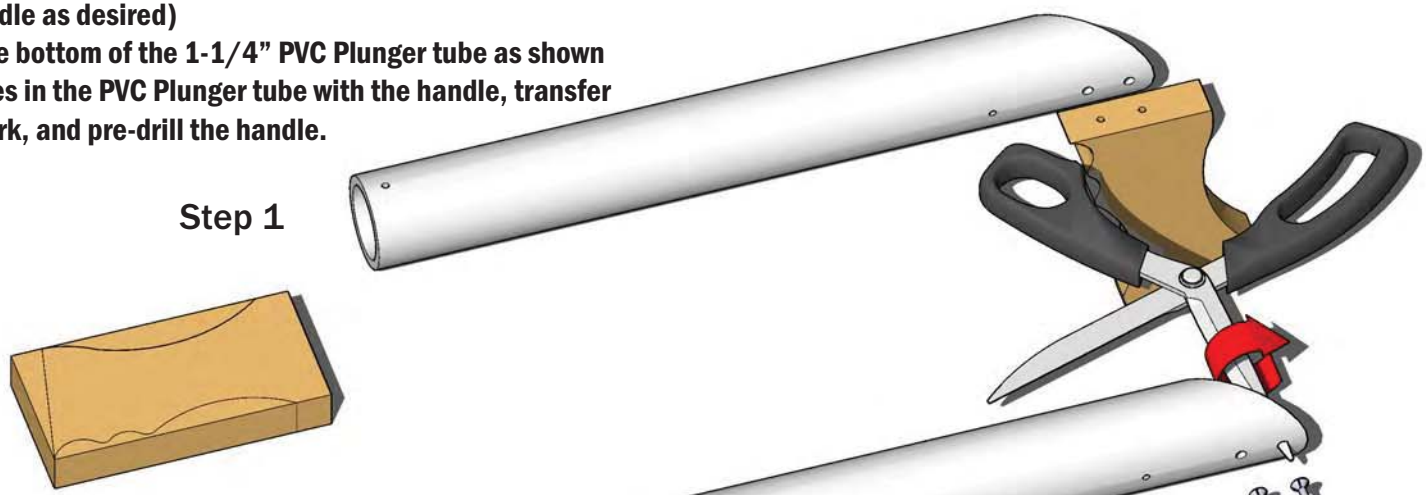

Step 1

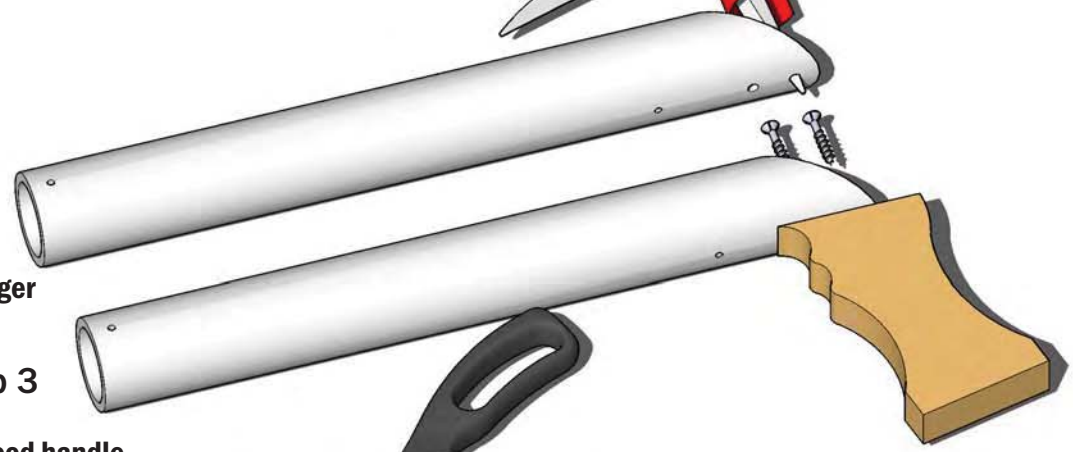

Step 2

Ream out the holes in the bottom of the 1-1/4” PVC Plunger tube - The holes only need to be slightly larger so that the threads on the screws don’t engage them.

Step 3

Drive the screws through the PVC Plunger tube into the wood handle.

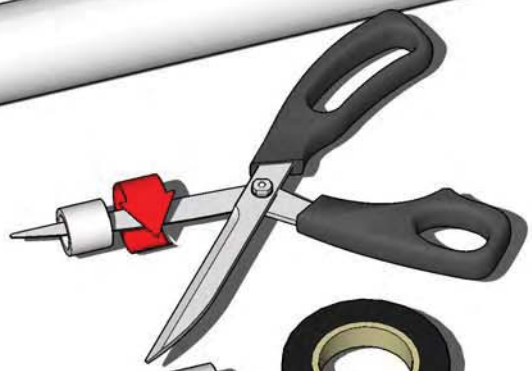

Step 4

Ream out the 3/4” long piece of 1/2” PVC so that a piece of 1/2” CPVC slides freely through it. You do not need to do this if you found 200 psi PVC.

Step 5

Insert the reamed-out 1/2” PVC into one half of the 1/2” PVC coupler. Wrap it in tape so it fits snugly into the 1-1/4” PVC Plunger tube, but still slides in and out easily. If you have 1” PVC, you can use a 3/4” long piece to replace most of the tape.

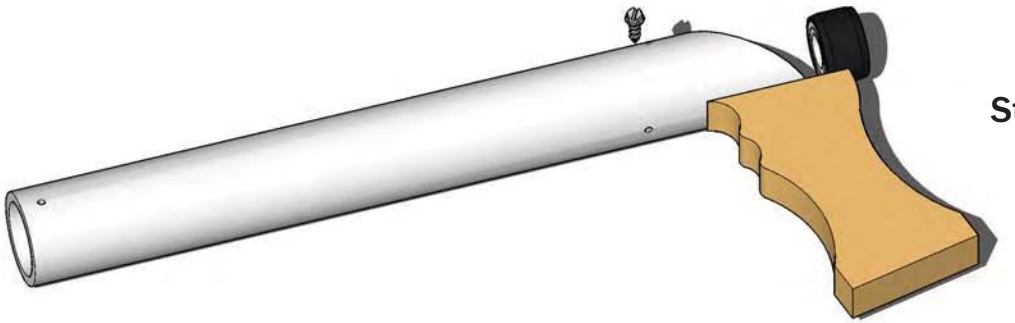

Step 6

Insert the coupler-bushing into the blaster as shown, so that the back of the bushing is about 1" past the handle. Drill a hole and drive a 1/2" #8 screw into the bushing.

Warning! Do not drive the screw so far that it protrudes into the hole in the 1/2" PVC ring - this will obstruct the plunger inserted later. The screw should not be fully driven into the blaster. You can make it drive fully by grinding off the tip until it does not interfere with the opening.

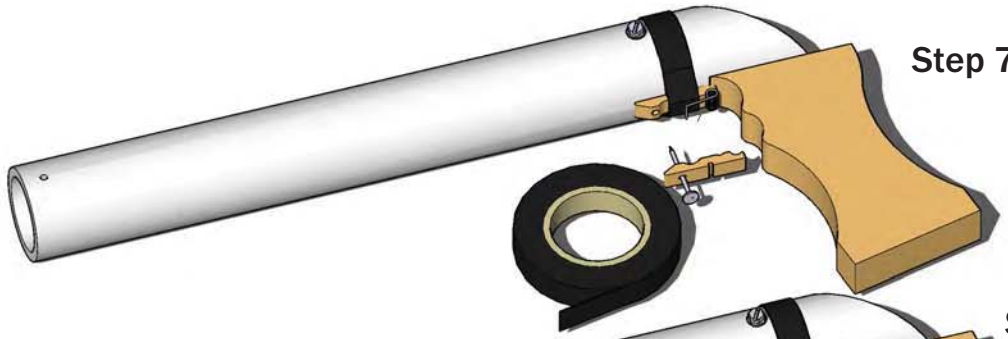

Step 7

Drill a hole through both jaws of the clothespin. Remove one jaw, attach the other (with the spring) to the Plunger Tube as shown wi tape (or glue, if you have it). Drill a hole through the plunger tube and the 1/2" PVC bushing made in steps 5/6.

Insert the 1-1/4" nail into the other jaw and reatach as shown, so that the nail protrudes into the 1/2" PVC bushing.

Step 8 **Attach the 1-1/2" x 1-1/2" corner bracket as shown.**

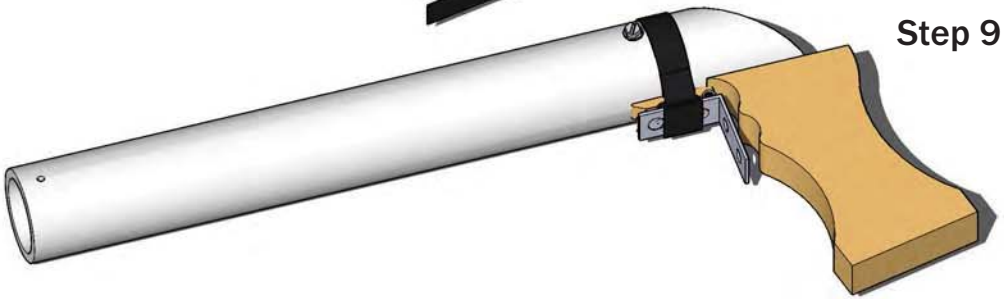

Step 9 **Tape (or glue) the corner bracket to the jaw with the nail in it.**

Warning! Do not tape the bracket to the both jaws, or to the blaster itself! Pulling the bracket should seperate the jaws from eachother.

Mark-8 Catch

Meaker VI - Nerfhaven Homemade Contest - 2013

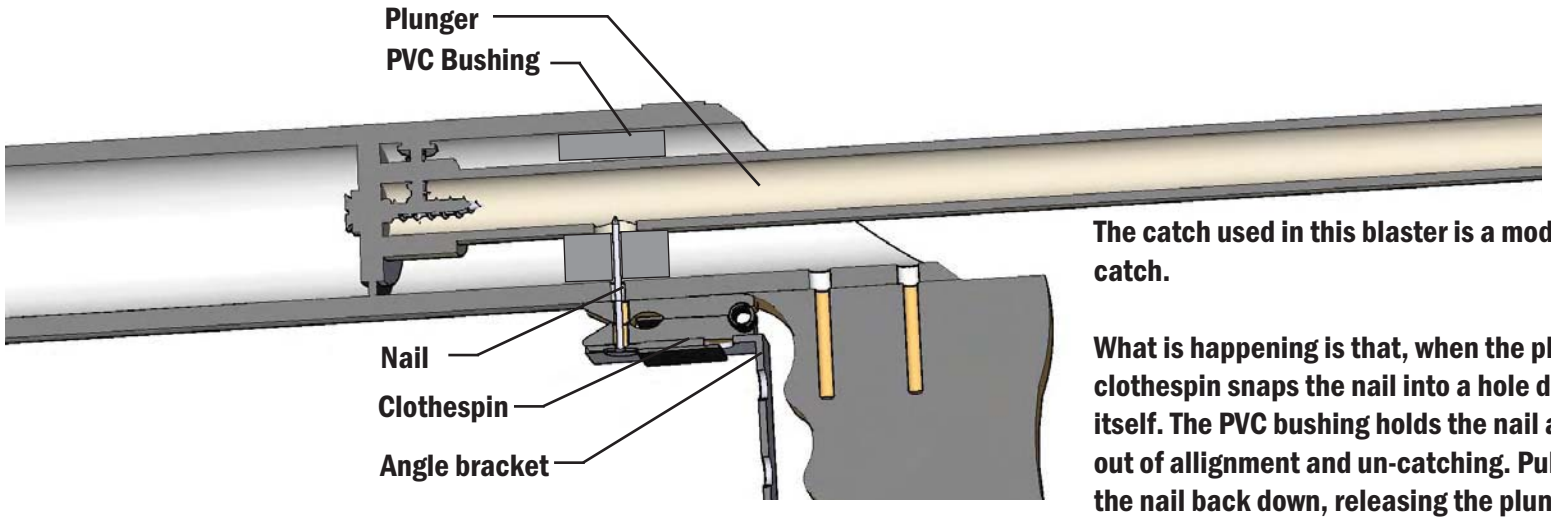

The catch used in this blaster is a modified clothespin “SNAP” catch.

What is happening is that, when the plunger tube is pulled back, the clothespin snaps the nail into a hole drilled in the plunger tube itself. The PVC bushing holds the nail and the plunger from bending out of allignment and un-catching. Pulling the angle bracket pulls the nail back down, releasing the plunger.

This system works with compression spring or tension spring setups, however for simplicity I’ve used tension springs (bungies/latex tubing) here.

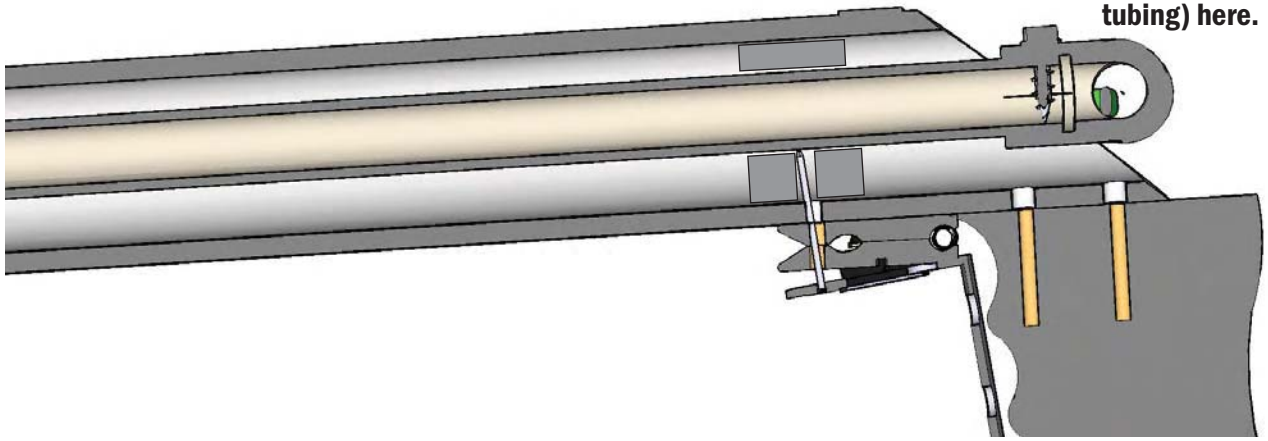

The complexity in compression springs is figuring out the catch placement, which can be eased by using consistant spring lenghts (so they always compress to the same point) or by leaving the spring partially uncompressed.

Mark-8 RSCB

Meaker VI - Nerfhaven Homemade Contest - 2013

"RSCB" is an acronym for "Rawray, ShortShit, Cynical Synapse and 3DBBQ," who were its creators. It is a type of barrel/clip setup. This one holds 5-6 of my 3" long darts.

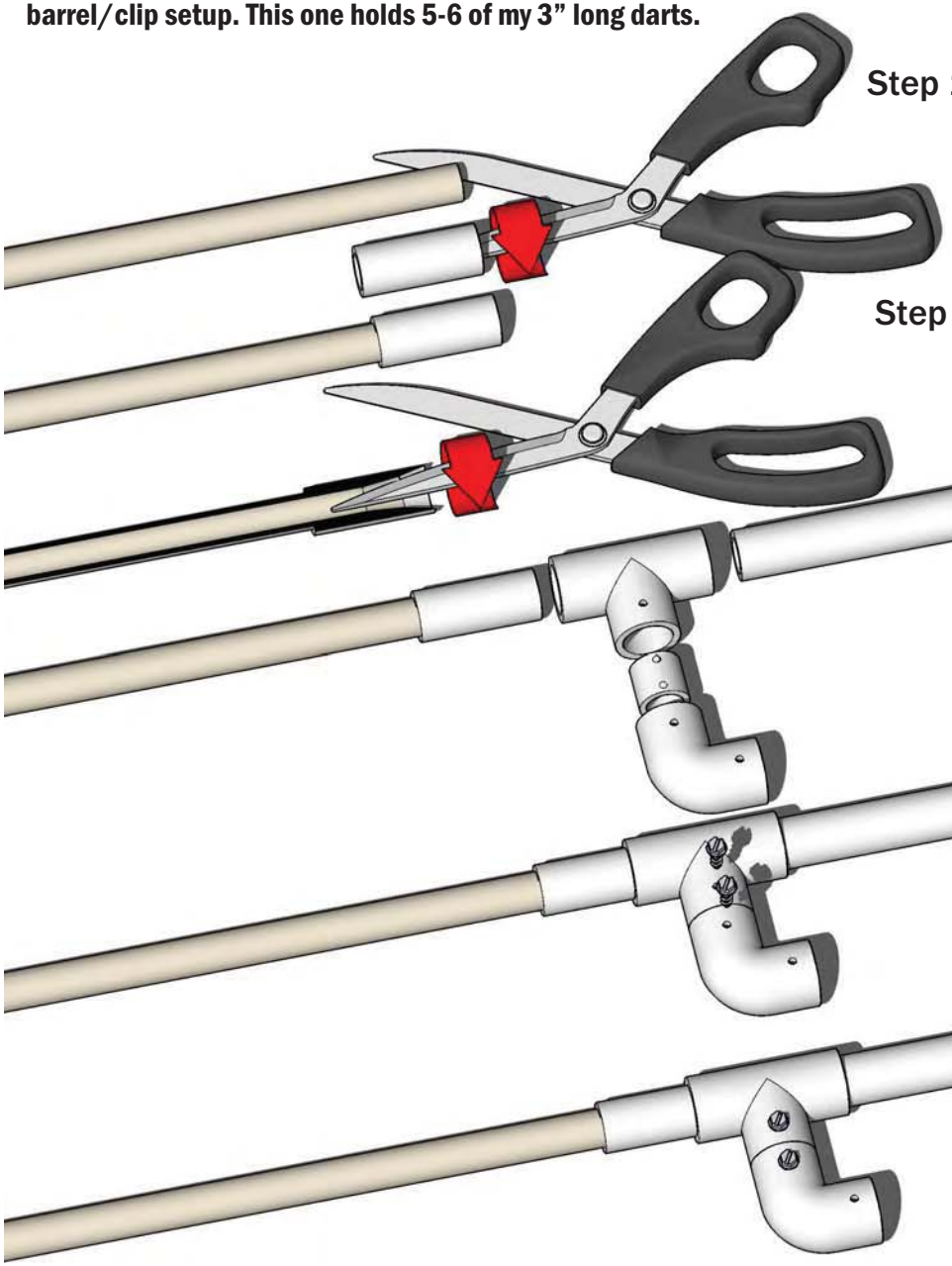

Step 1 Ream out the 2" piece of 1/2" PVC so that the 14" long 1/2" CPVC barrel will fit. If it won't go all the way in, get it at least 1/2" in and cut off the remaining 1/2" PVC. If you're using 200 psi, wrap the CPVC in tape so it fits snugly and doesn't move.

Step 2 Ream out the assembly as shown - you're trying to get a smooth ramp for the darts to get sucked into the barrel.

Step 3 Attach all the parts as shown. Apply tape or glue to keep the barrel in the T. Drill holes and insert 1/2" #8 Screws as shown, optionally gluing.

Note: Doing this on a flat surface will help keep everything alligned - the better alligned this setup is, the more accurate it should be .

Step 4

Remove the endcap to load darts, replace when finished.

Mark-8 Final

Meaker VI - Nerfhaven Homemade Contest - 2013

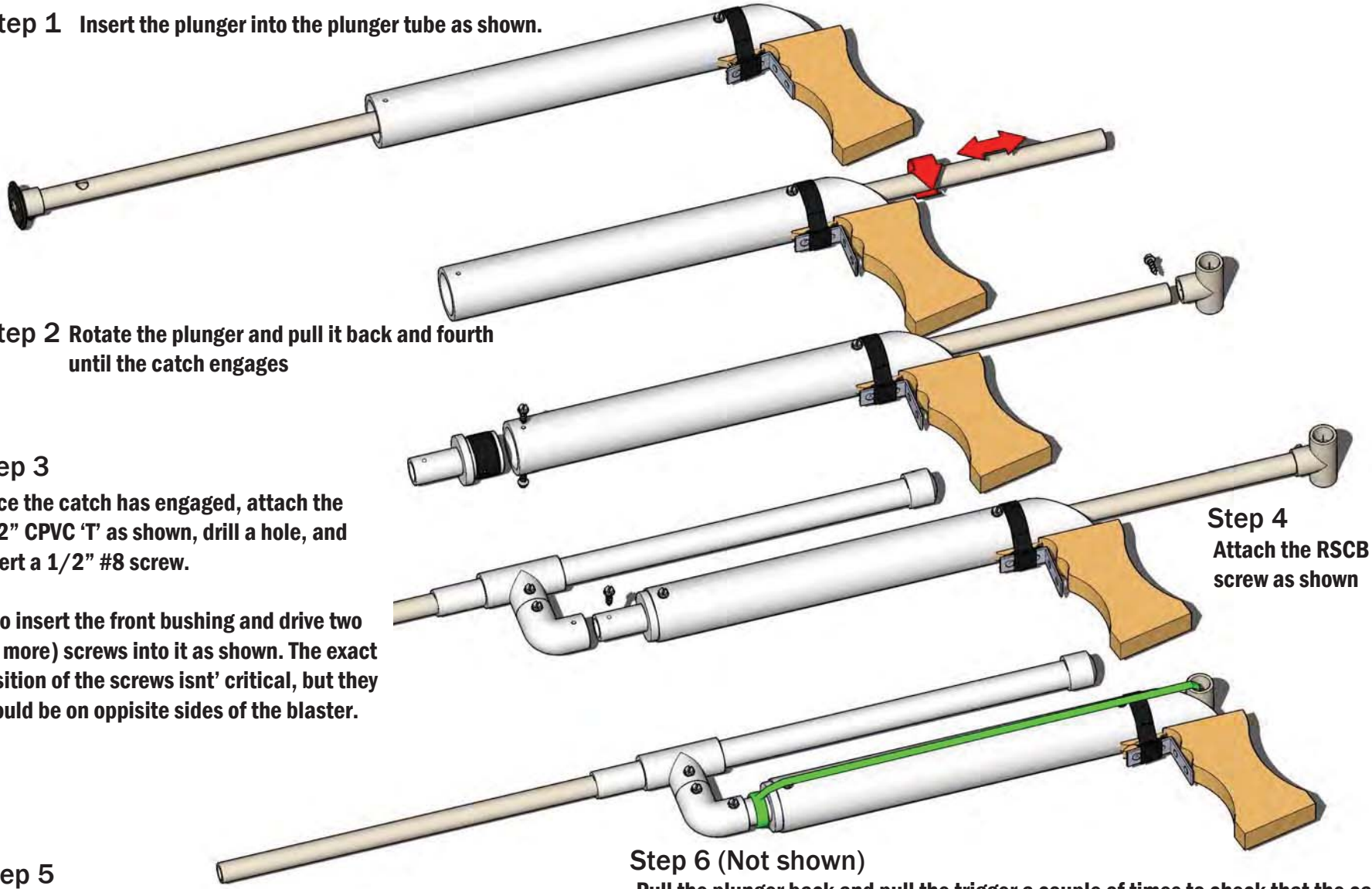

Step 1 Insert the plunger into the plunger tube as shown.

Step 2 Rotate the plunger and pull it back and fourth until the catch engages

Step 3

Once the catch has engaged, attach the 1/2" CPVC 'T' as shown, drill a hole, and insert a 1/2" #8 screw.

Also insert the front bushing and drive two (or more) screws into it as shown. The exact position of the screws isnt' critical, but they should be on oppisite sides of the blaster.

Step 4

Attach the RSCB with a screw as shown

Step 5

Attach the Latex/bungie with a double knot to the front barrel-stub. Run the band through the CPVC 'T' and around to the other side of the blaster, and tie another double knot around the barrel stub.

Step 6 (Not shown)

Pull the plunger back and pull the trigger a couple of times to check that the catch is working. If it isn't, try expanding the hole in the plunger tube or adjusting the length of the nail (shorten if it won't release, get a longer one if it won't catch). Once the plunger is catching reliably, remove the front bushing /RSCB and lubericate the plunger tube.

Remove the endcap on the RSCB, load it with darts, and enjoy your new blaster!

Credits:

Carbon - SNAP catch
Rork - Superlative Plunger head, SNAP improvements
Boltsniper - inspiration for my modifications to the SNAP catch
RSCB - the RSCB, for which I've included a writeup

Knot tying sequence I used:

Work loose end through

Wrap around and ithrough itself

Pull knot tight

Tie a second knot

Thread through CPVC 'T' on handle

Repeat with other end